

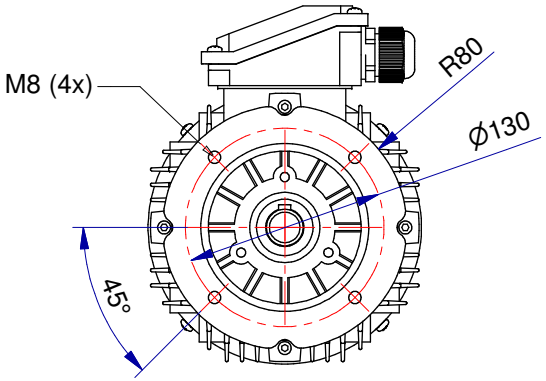

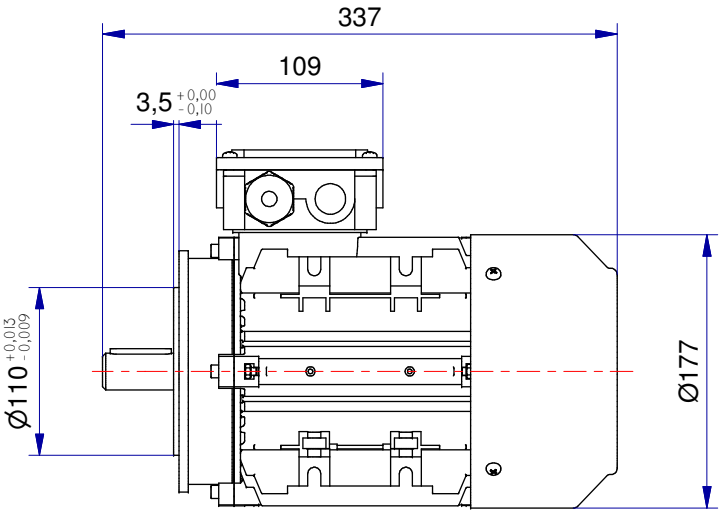

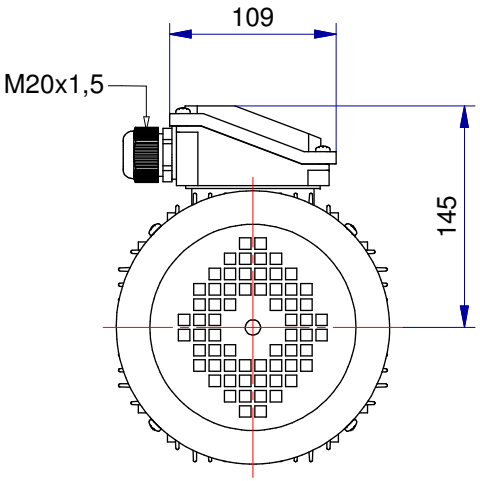

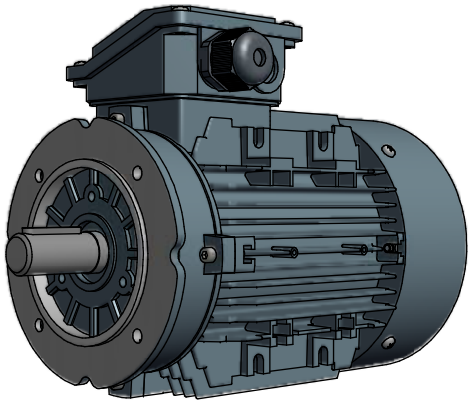

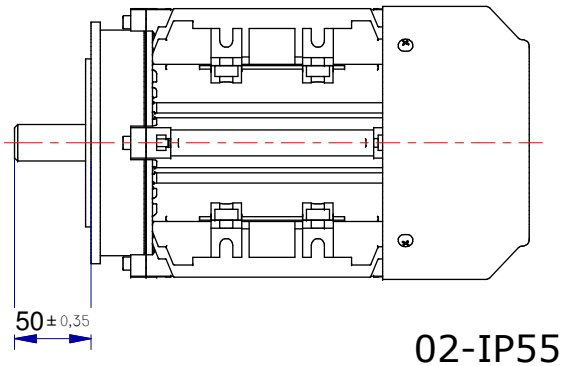

02-IP55-Aluminium-IE1_IE2_IE3-90L-B14B