

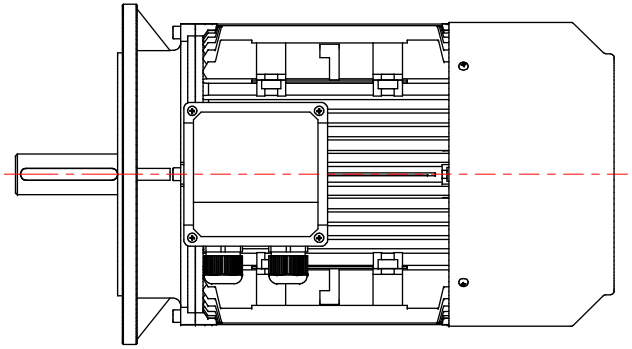

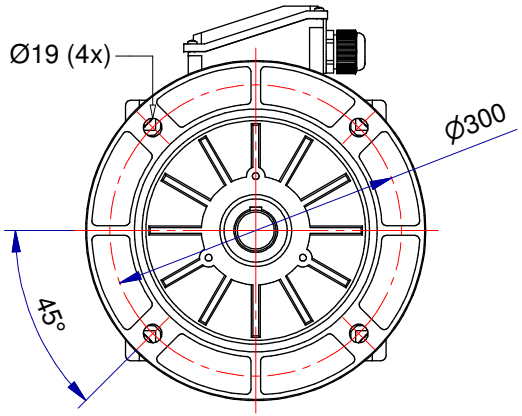

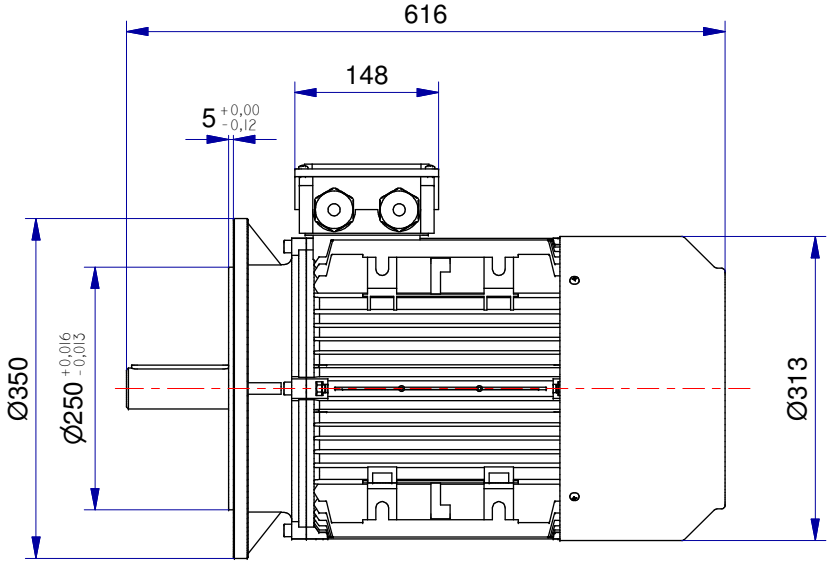

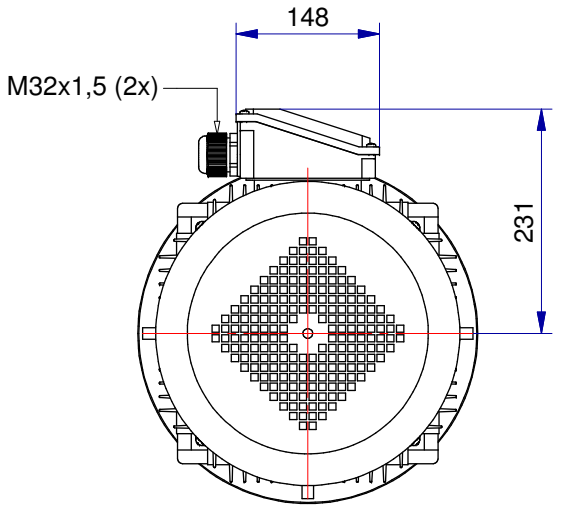

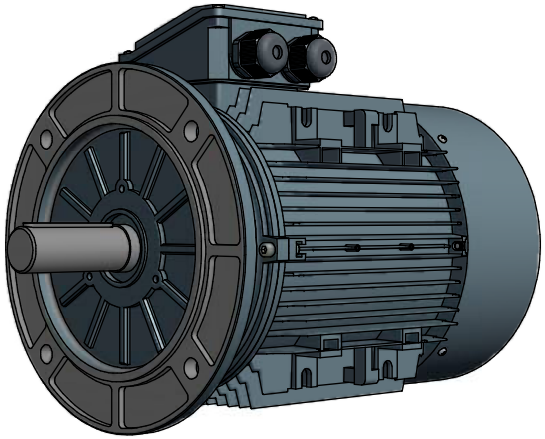

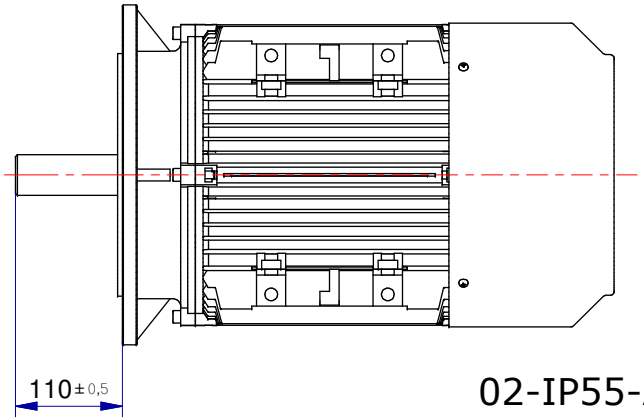

02-IP55-Aluminium-IE1_IE2_IE3-160M-B5