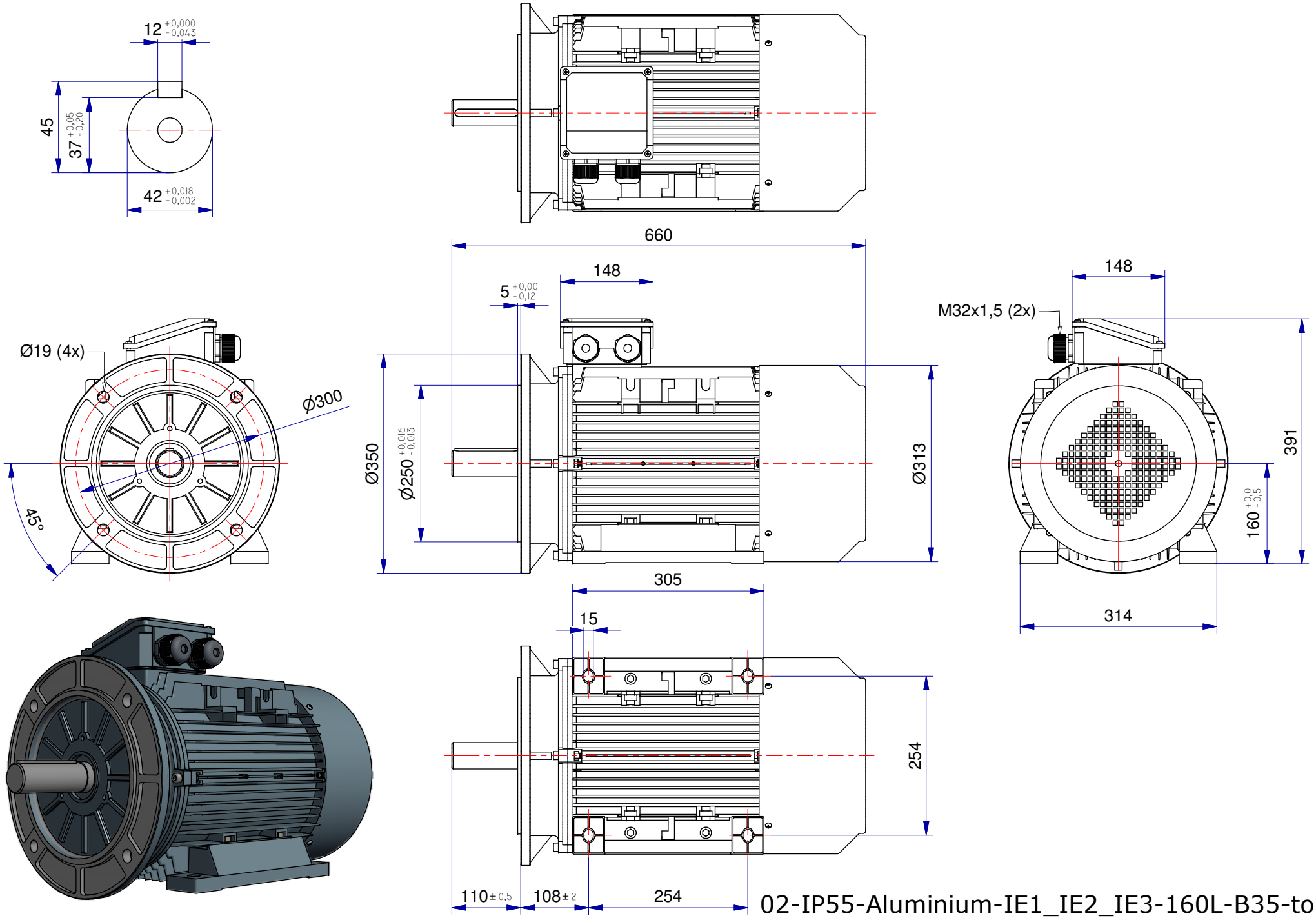

02-IP55-Aluminium-IE1_IE2_IE3-160L-B35-top