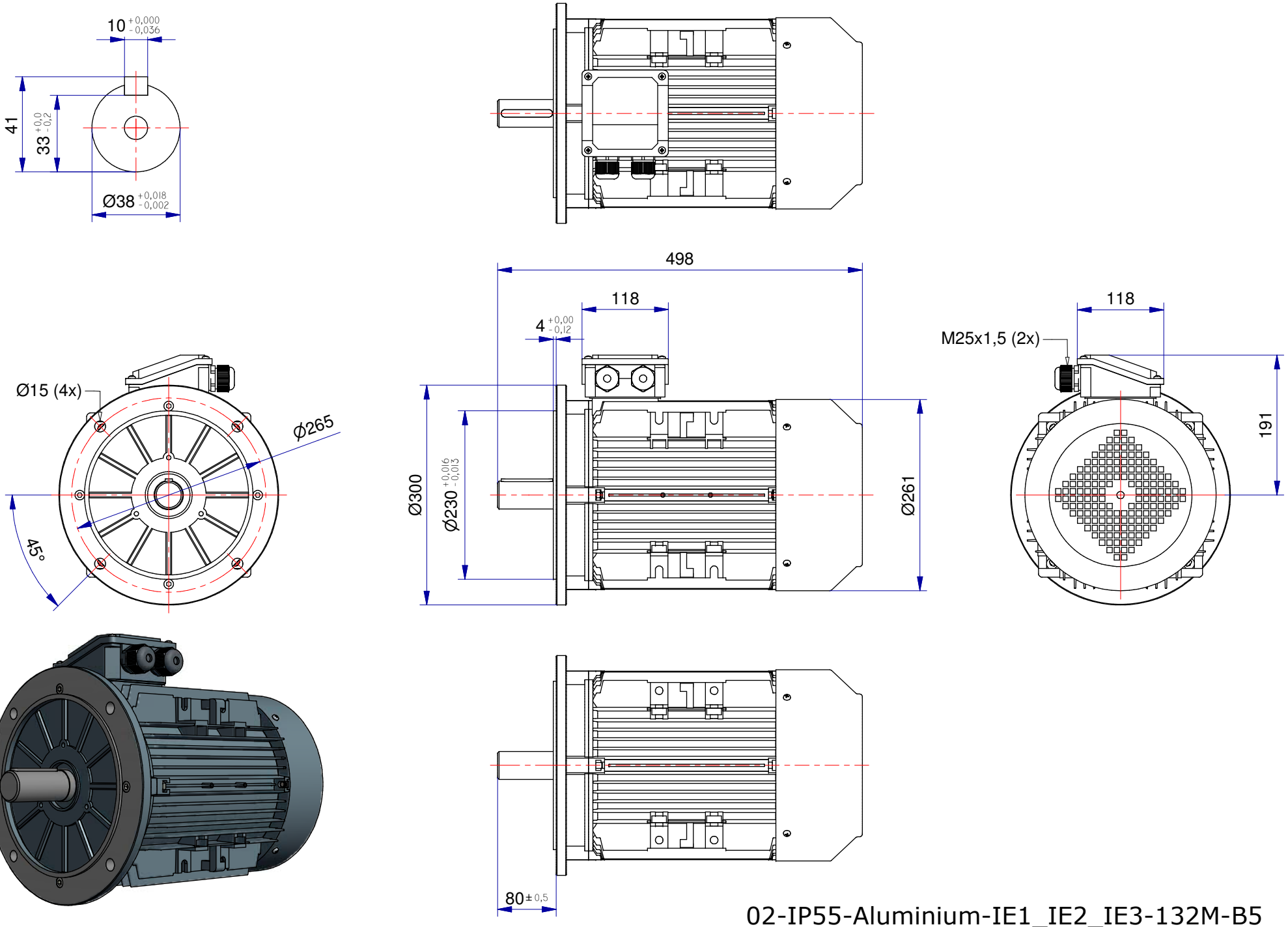

02-IP55-Aluminium-IE1_IE2_IE3-132M-B5