

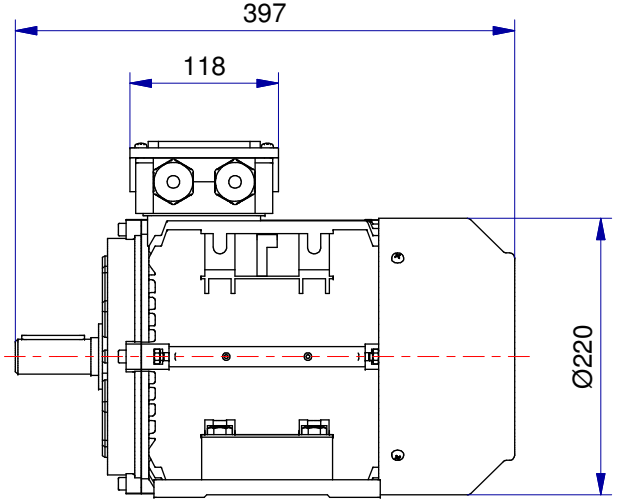

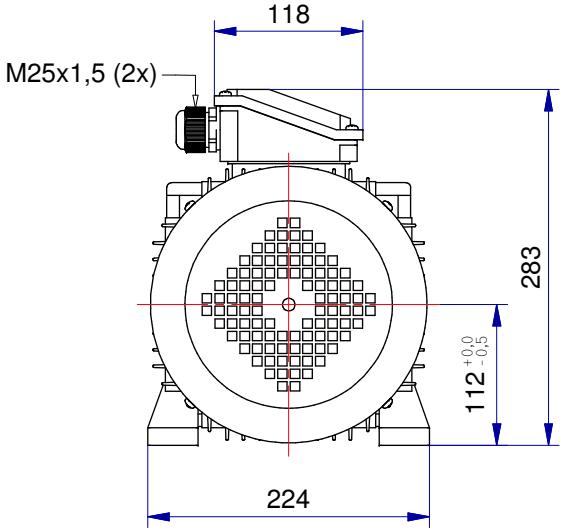

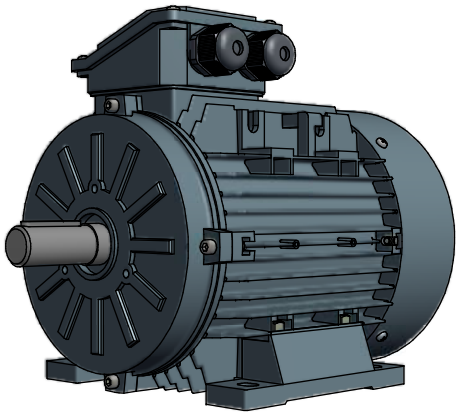

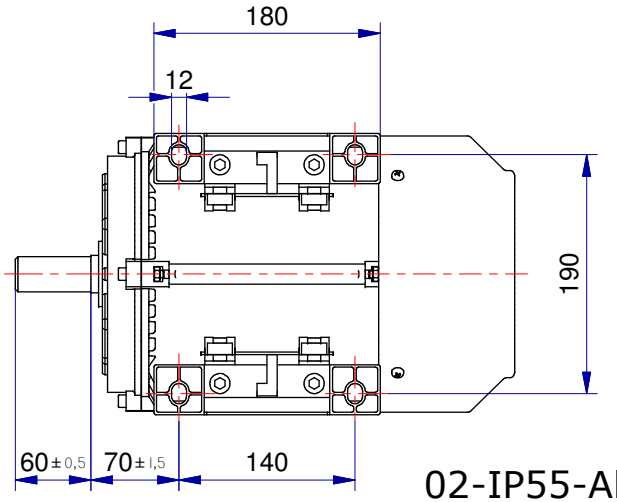

02-IP55-Aluminium-IE1_IE2_IE3-112-B3-top