

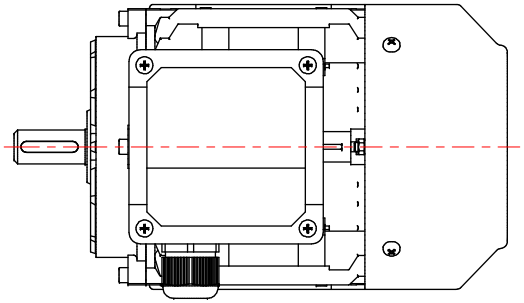

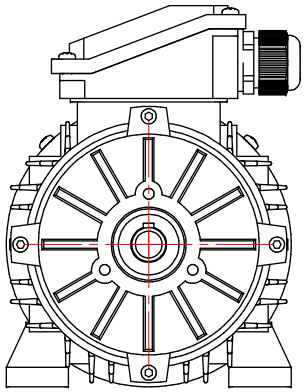

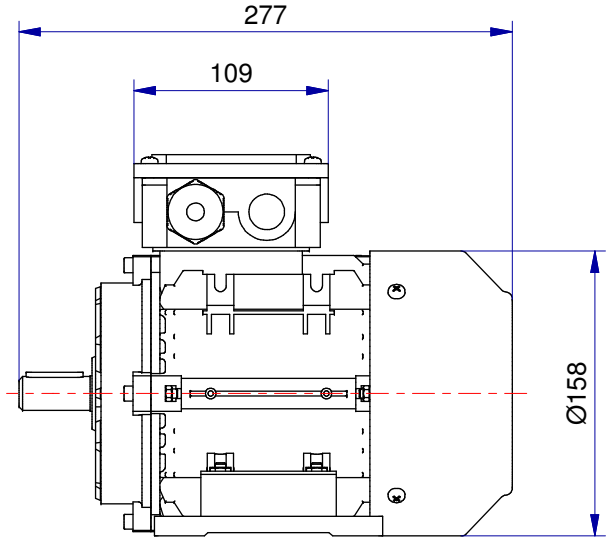

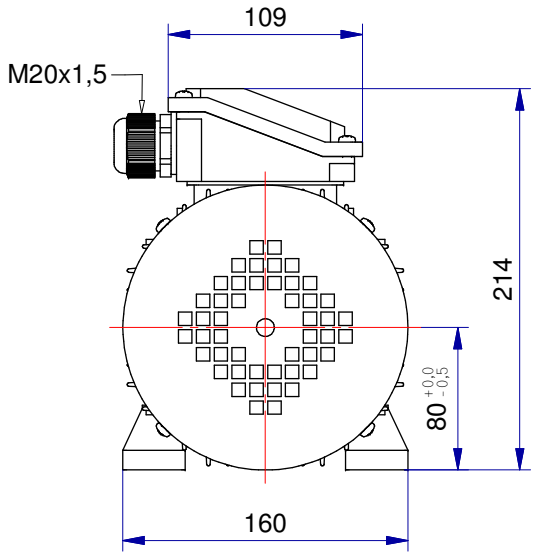

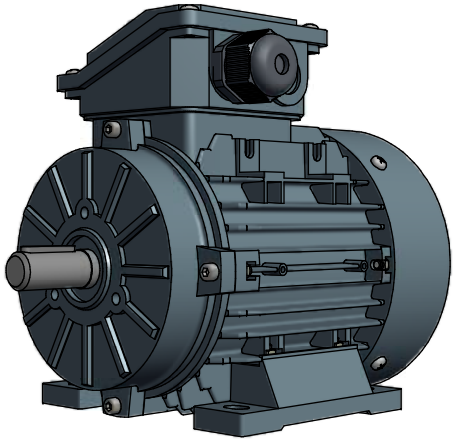

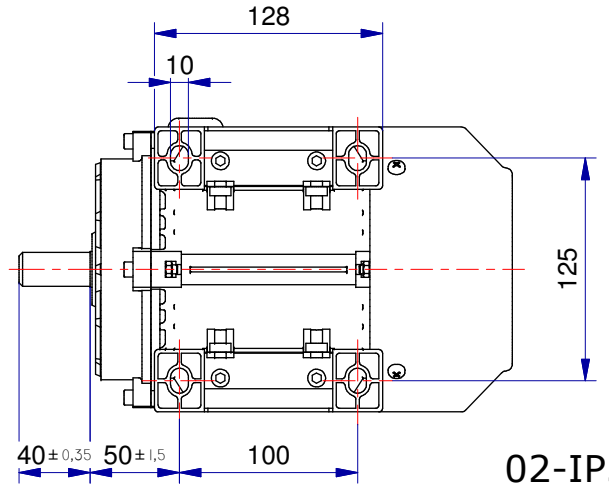

02-IP55-Aluminium-IE1_IE2_IE3-80-B3-top