

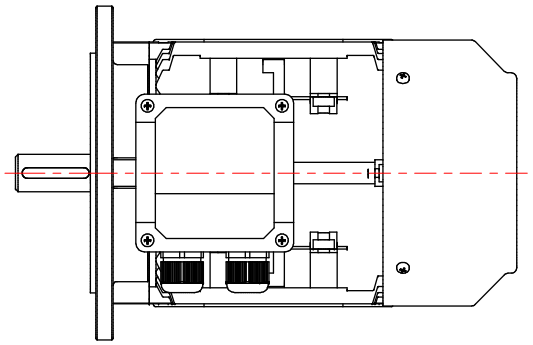

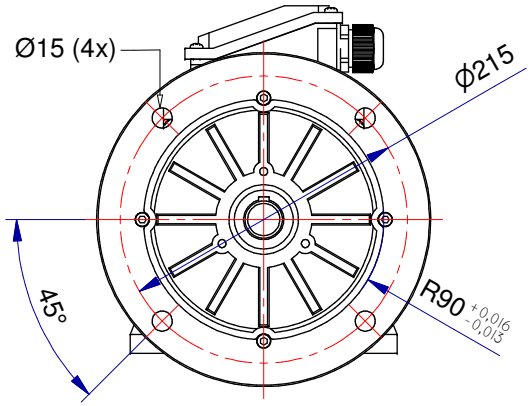

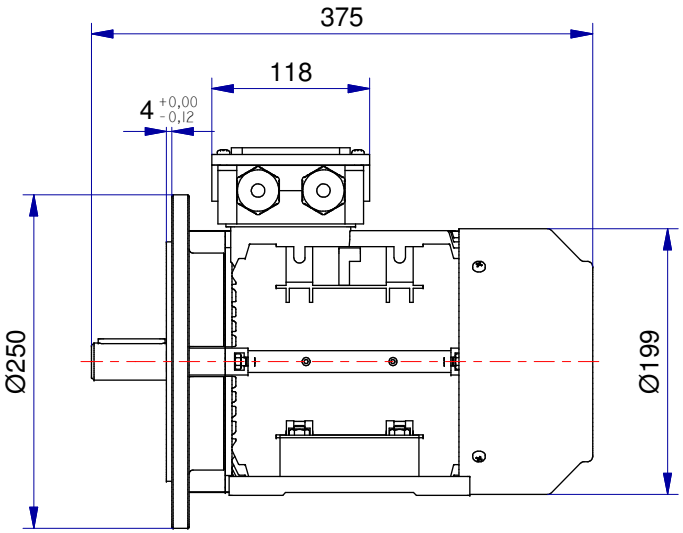

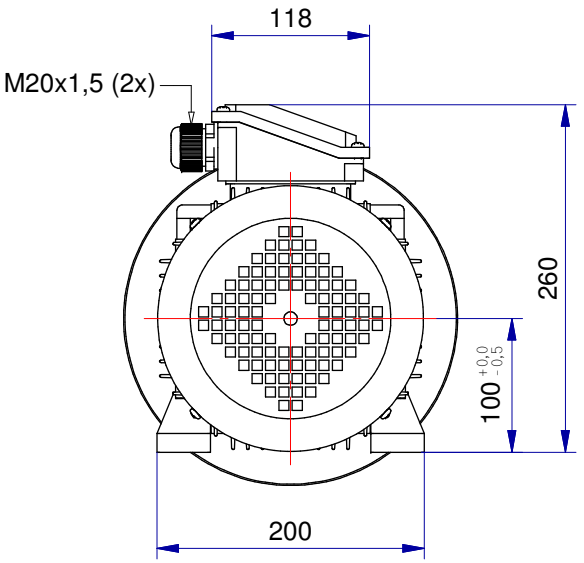

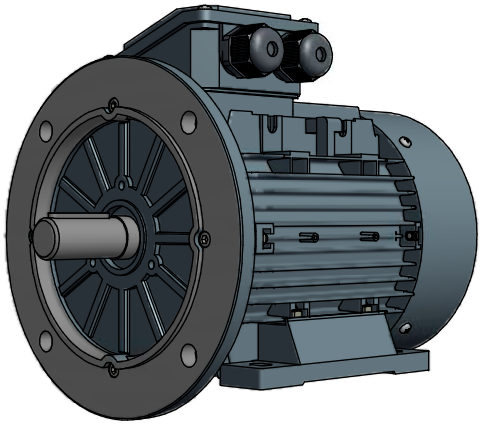

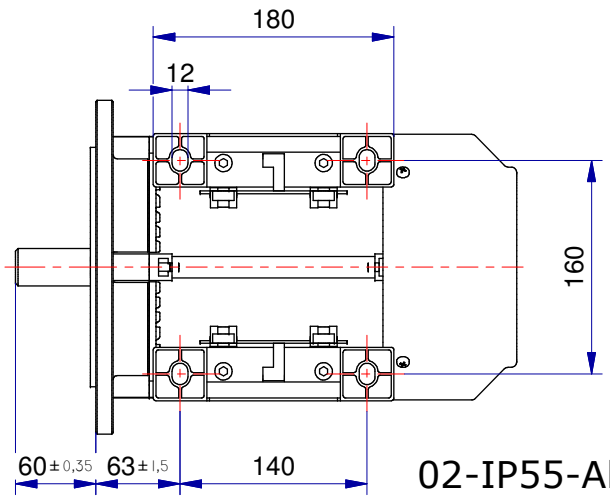

02-IP55-Aluminium-IE1_IE2_IE3-100-B35-top