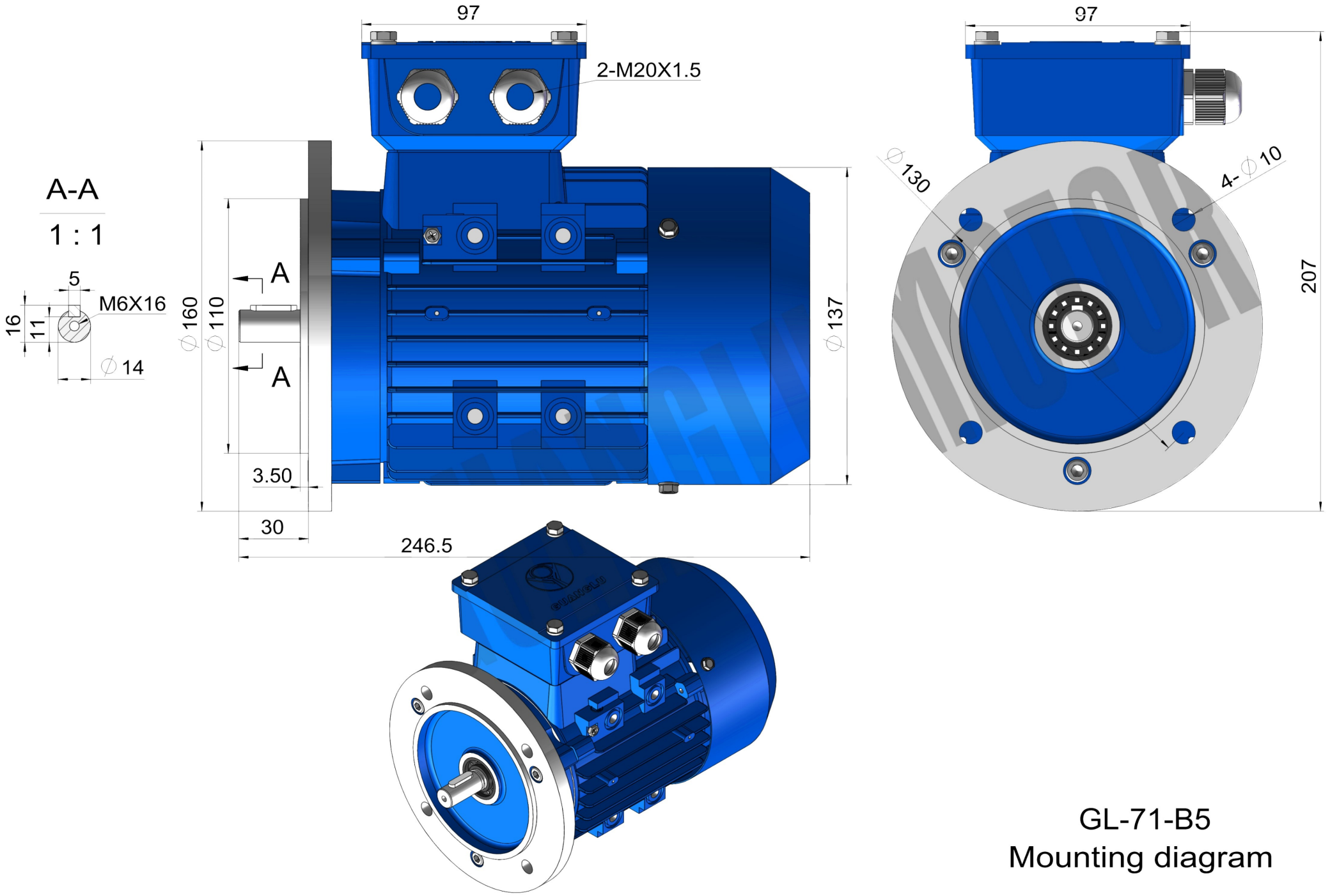

GL-71-B5
Mounting diagram

CHINA • GUANGLU ELECTRICAL CO.,LTD.