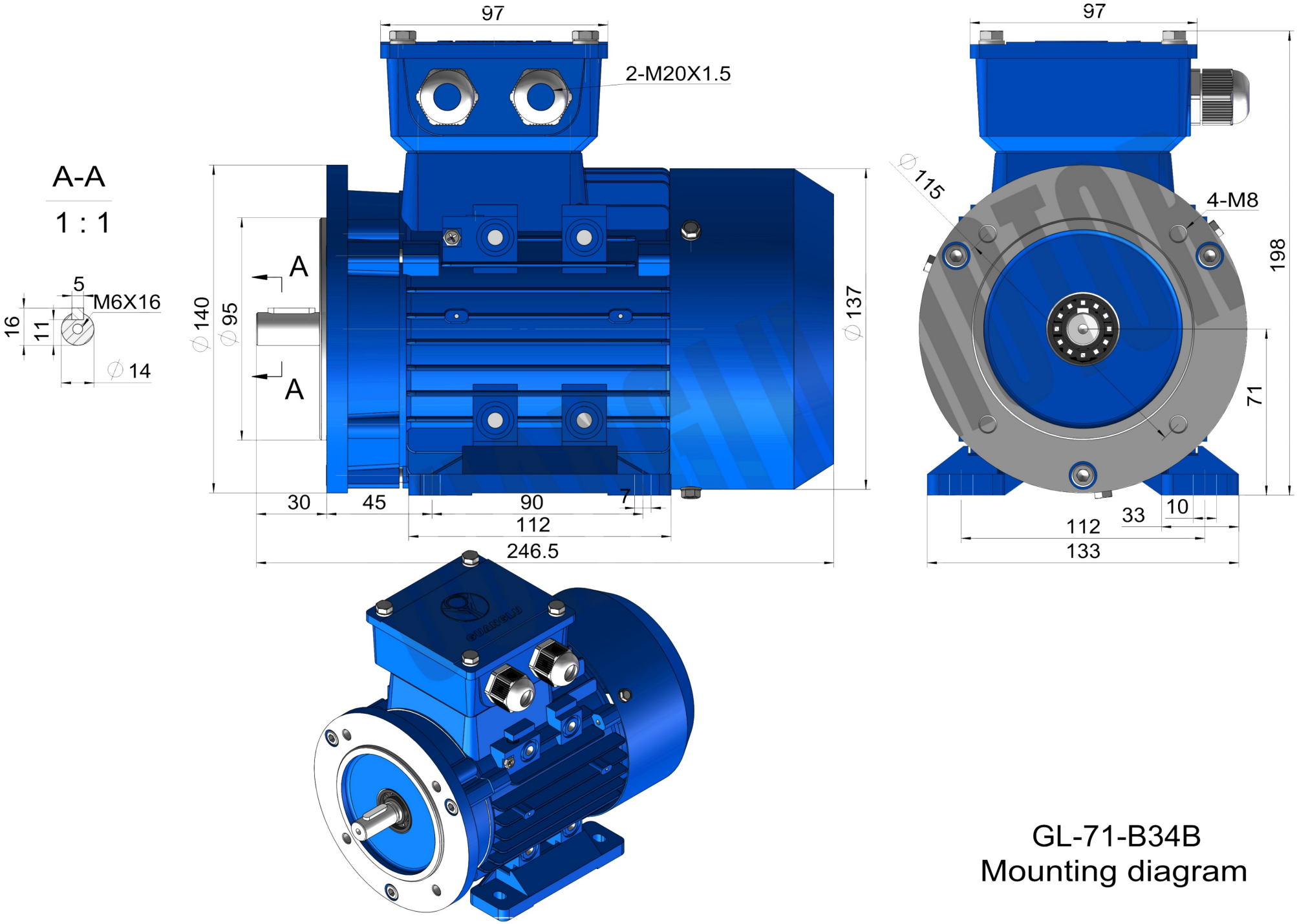


GL-71-B34B
Mounting diagram

CHINA • GUANGLU ELECTRICAL CO.,LTD.