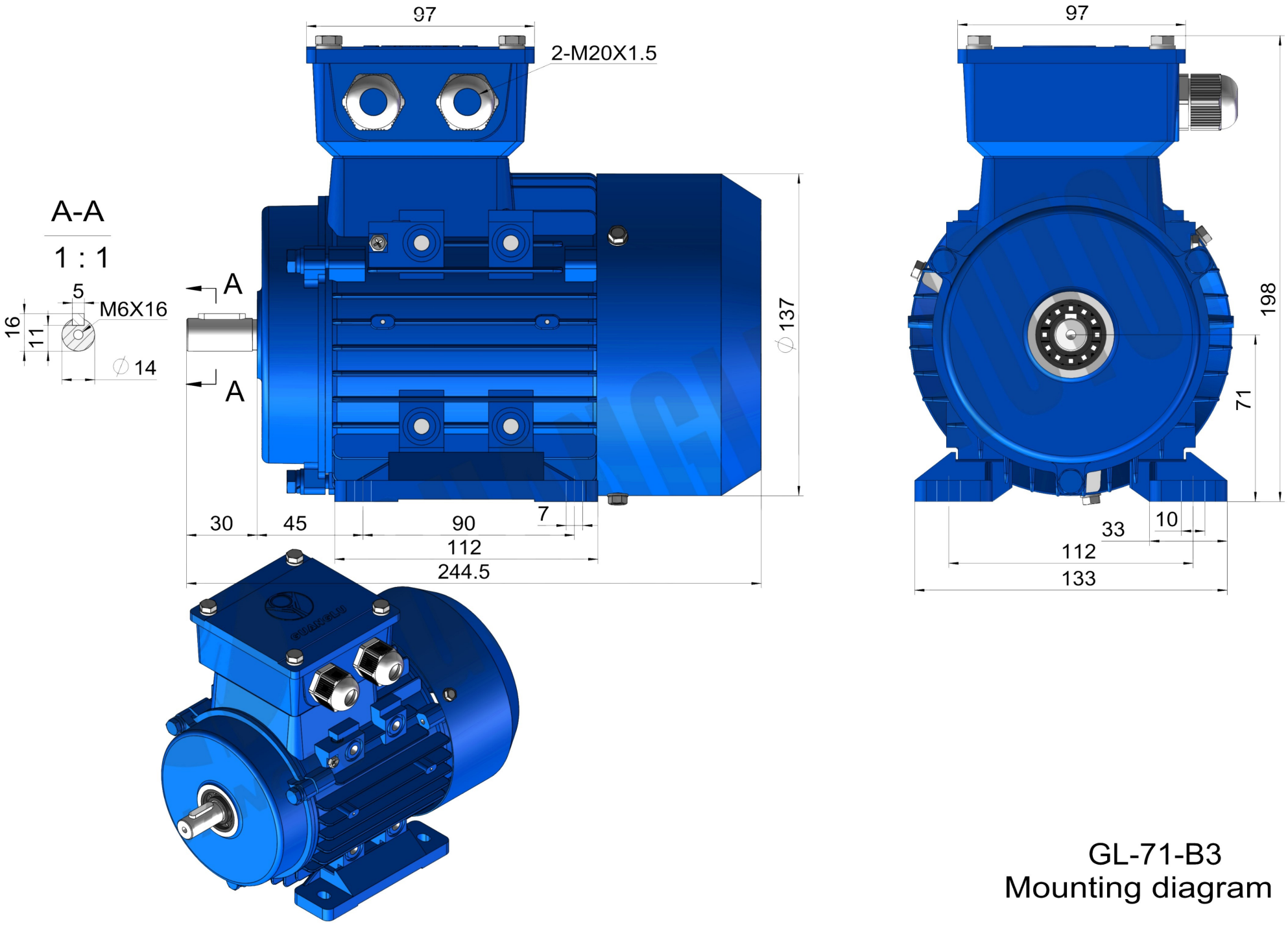

GL-71-B3
Mounting diagram

CHINA • GUANGLU ELECTRICAL CO.,LTD.