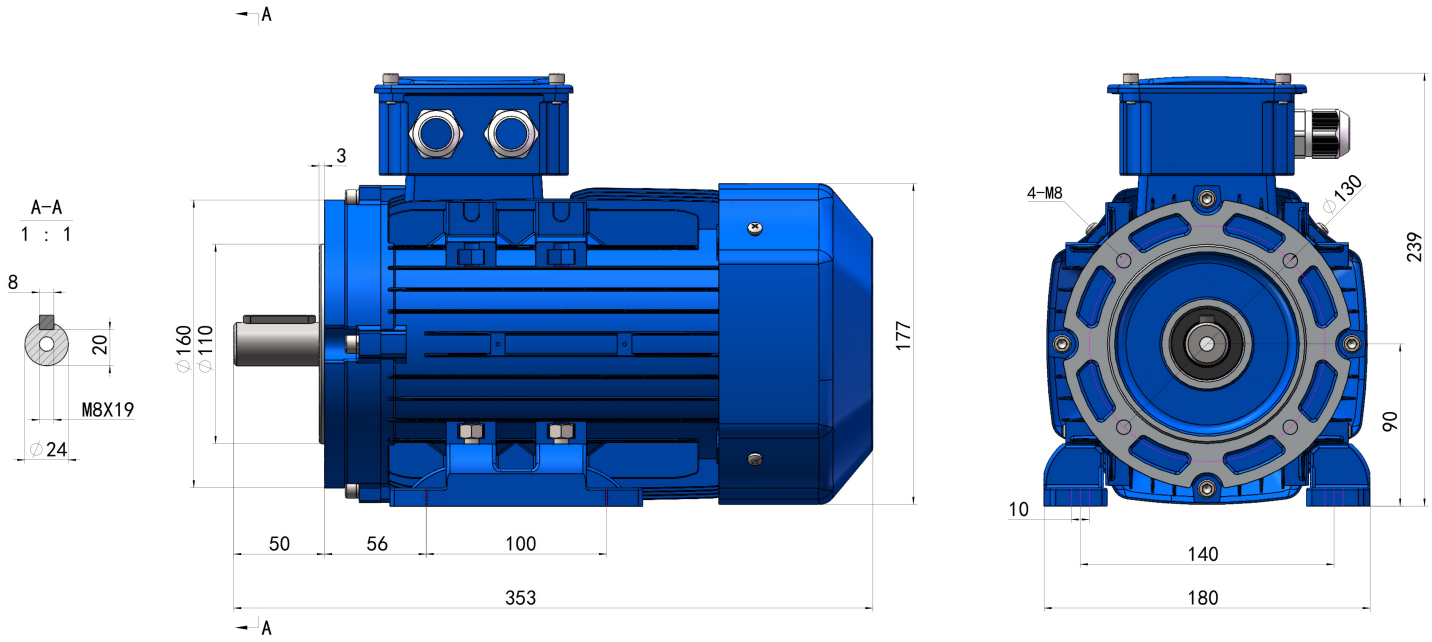

GE3-90S-B34B

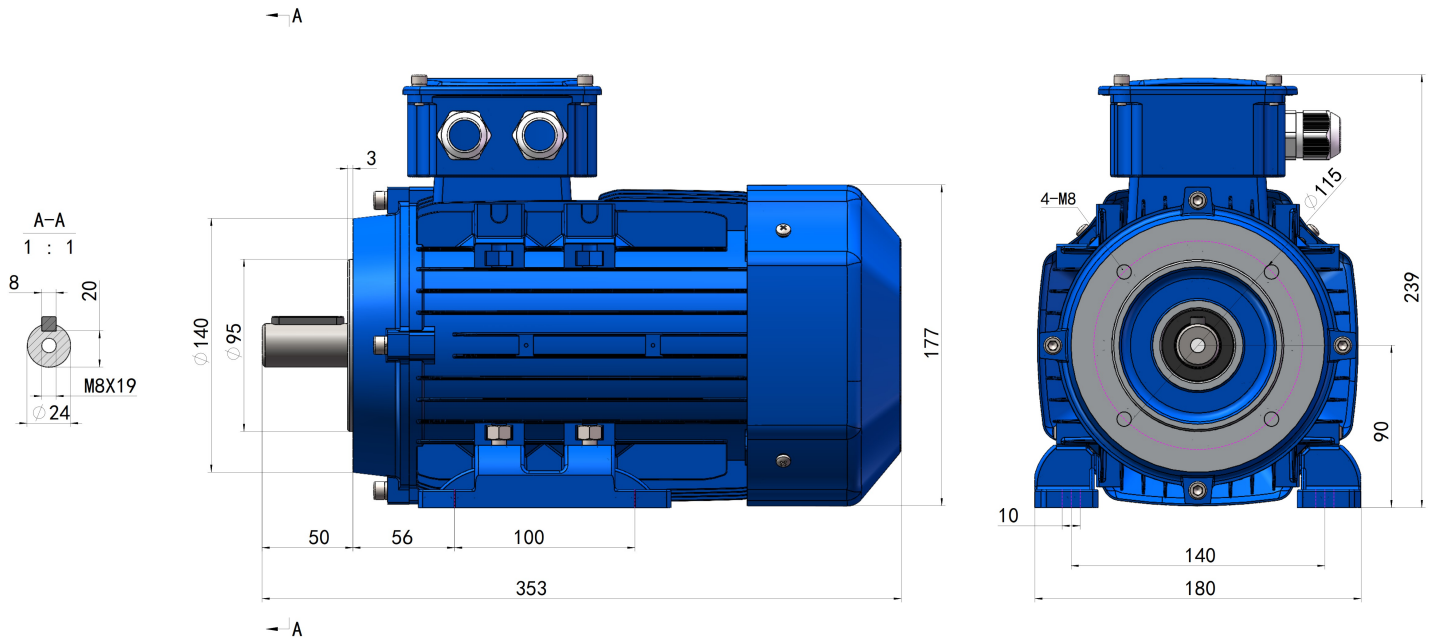

GE3-90S-B34