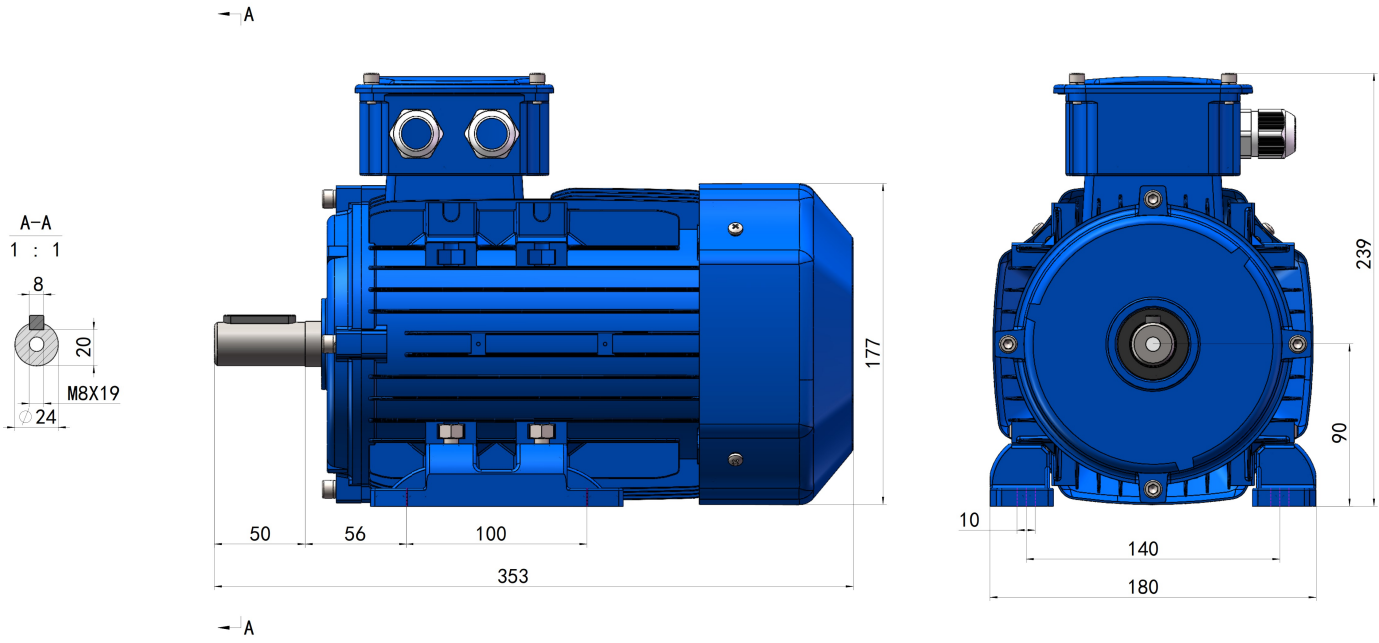

GE3-90S-B3

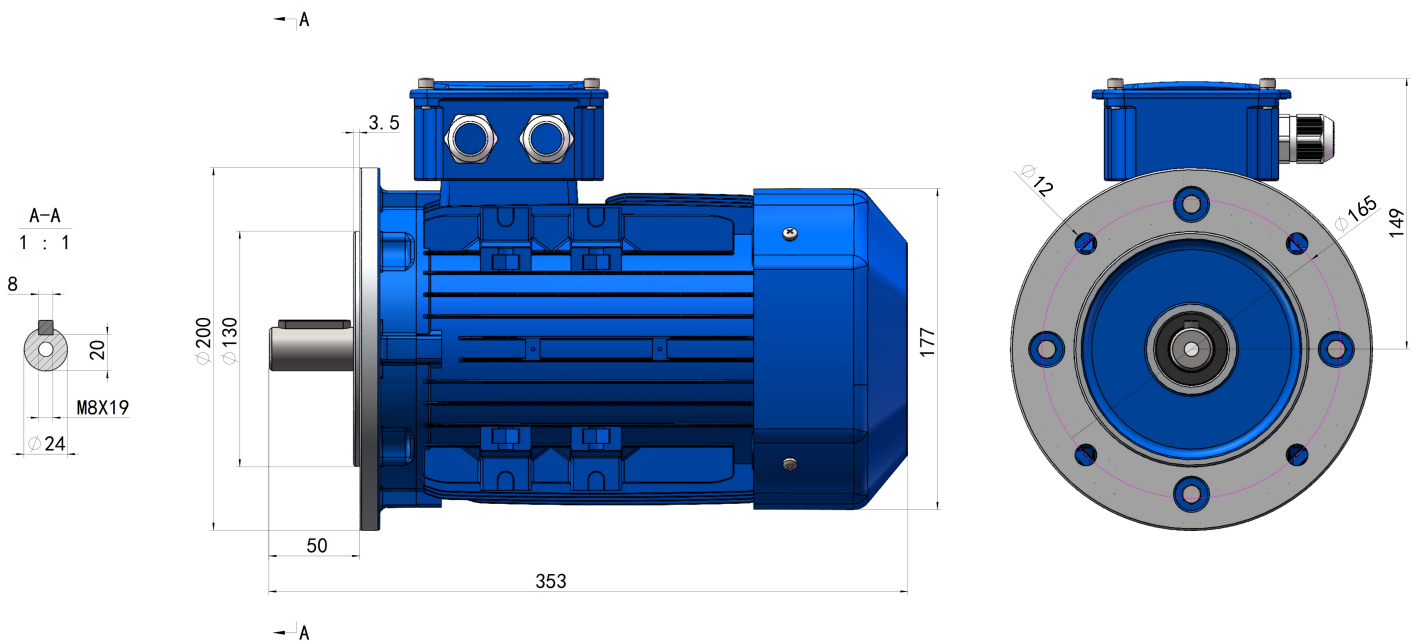

GE3-90S-B5