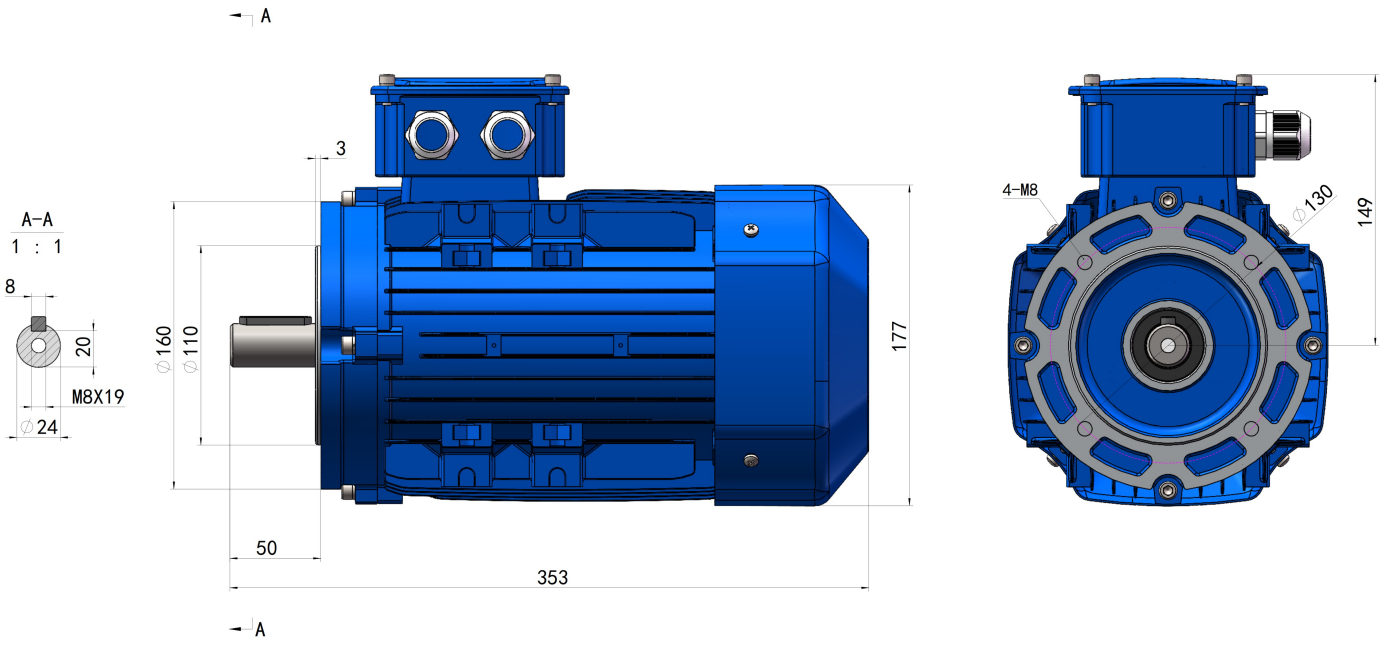

GE3-90S-B14B

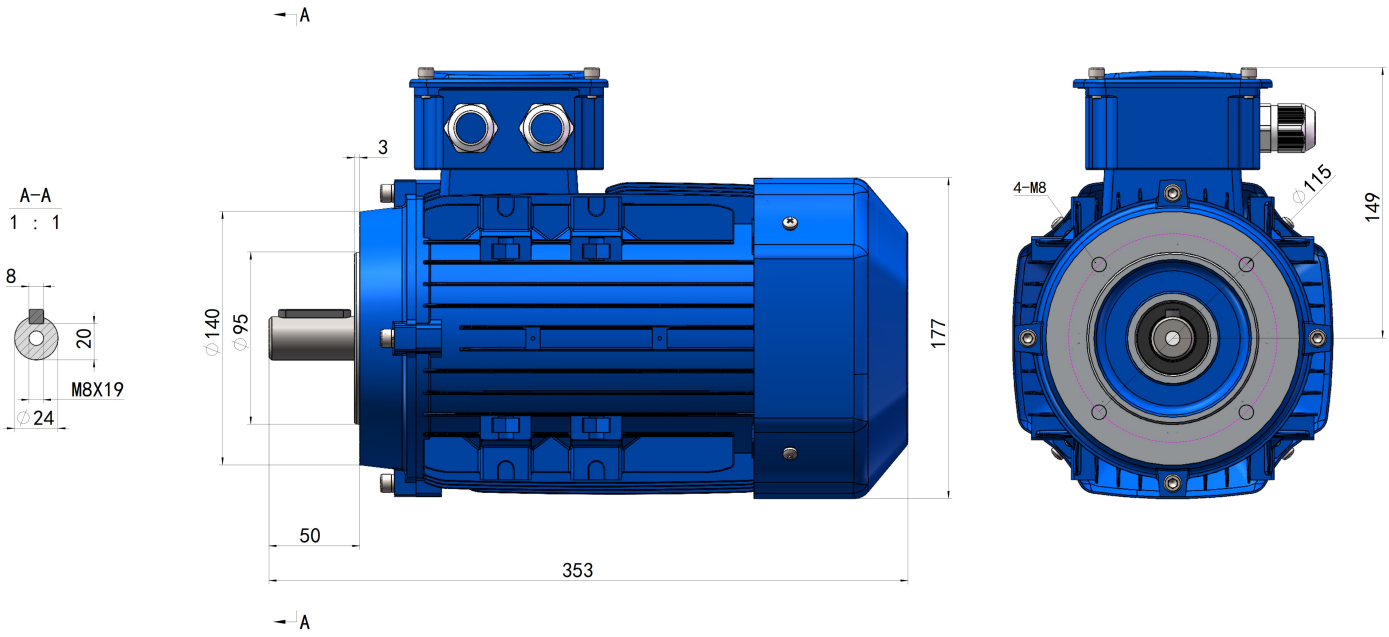

GE3-90S-B14