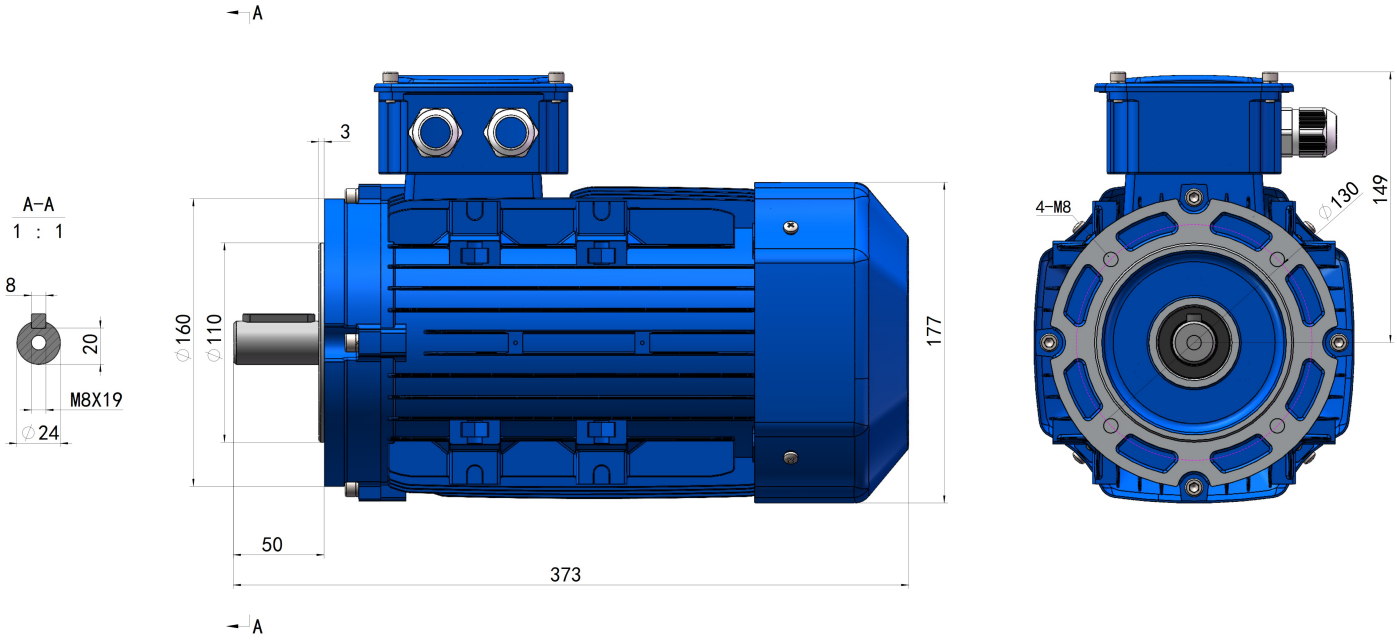

GE3-90L-B14B

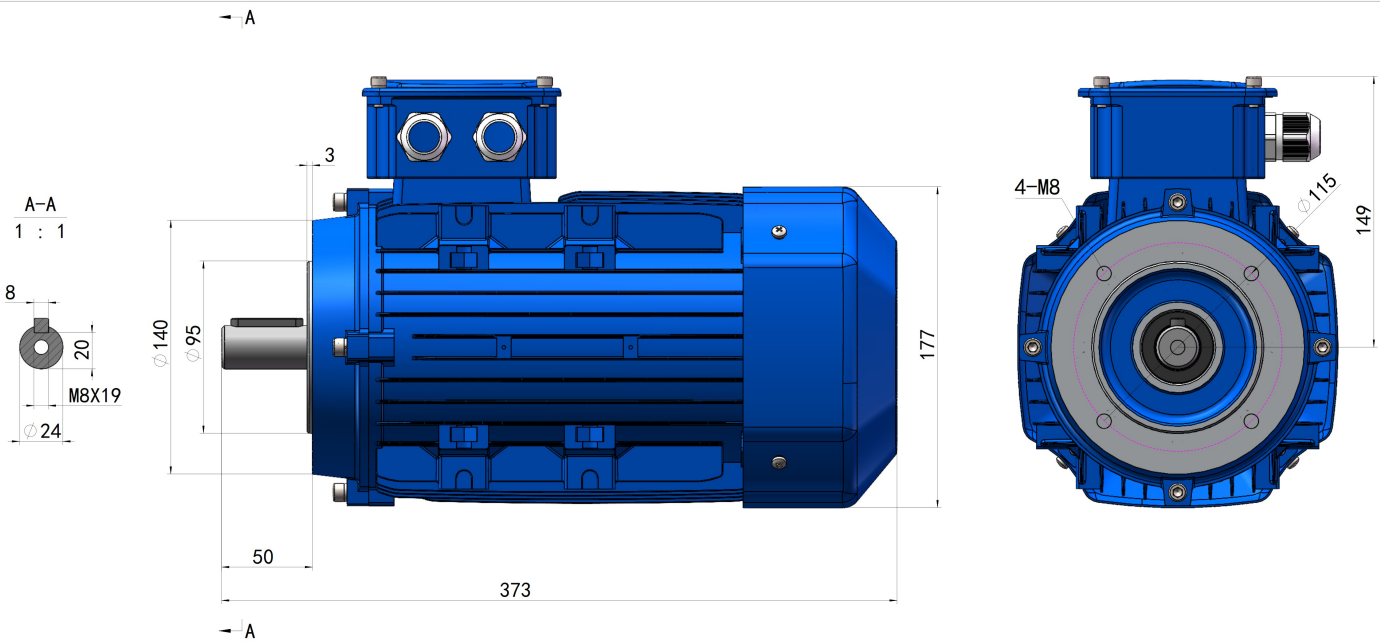

GE3-90L-B14