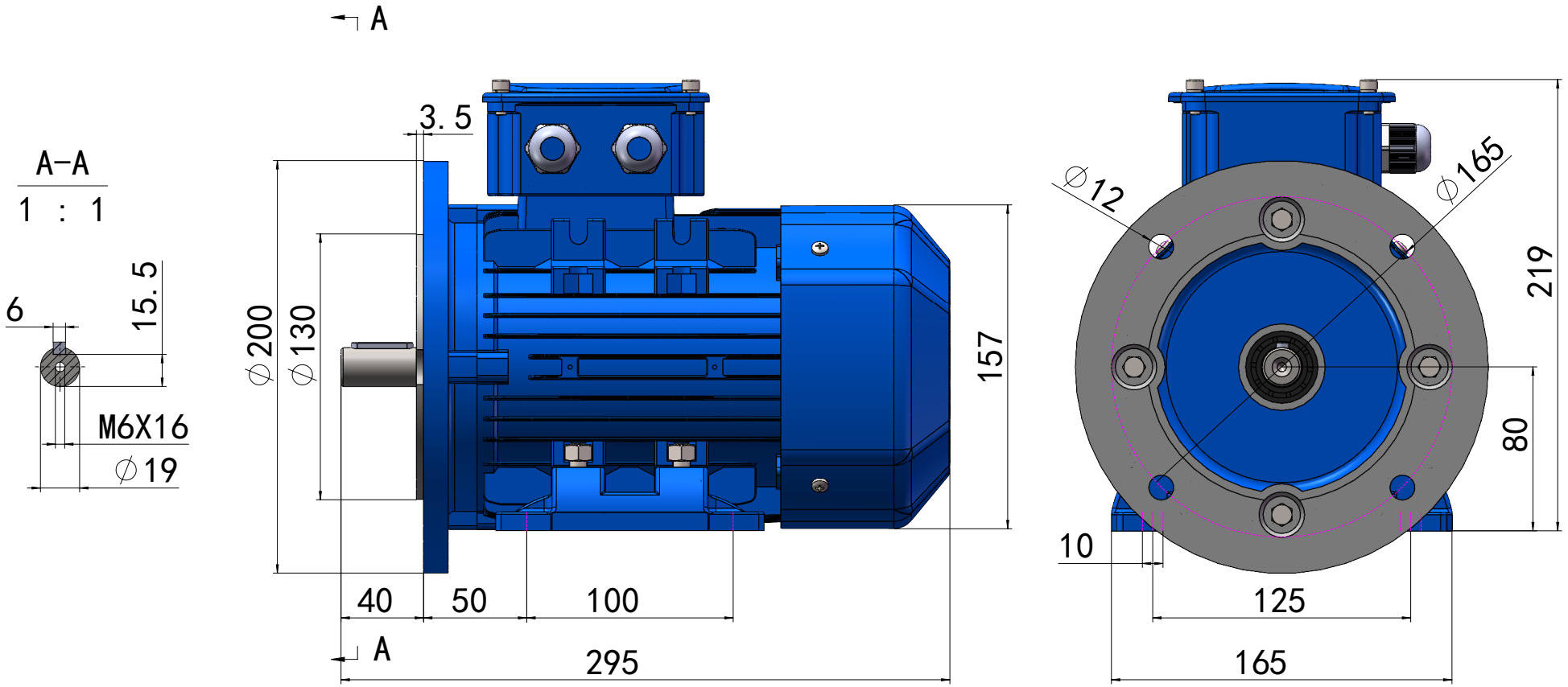
A
A-A
1 : 1
6
15.5
M6X16
∅19
3.5
∅200
∅130
157
40
50
100
295
A
∅12
∅165
219
80
10
125
165

GE3-80M-B35