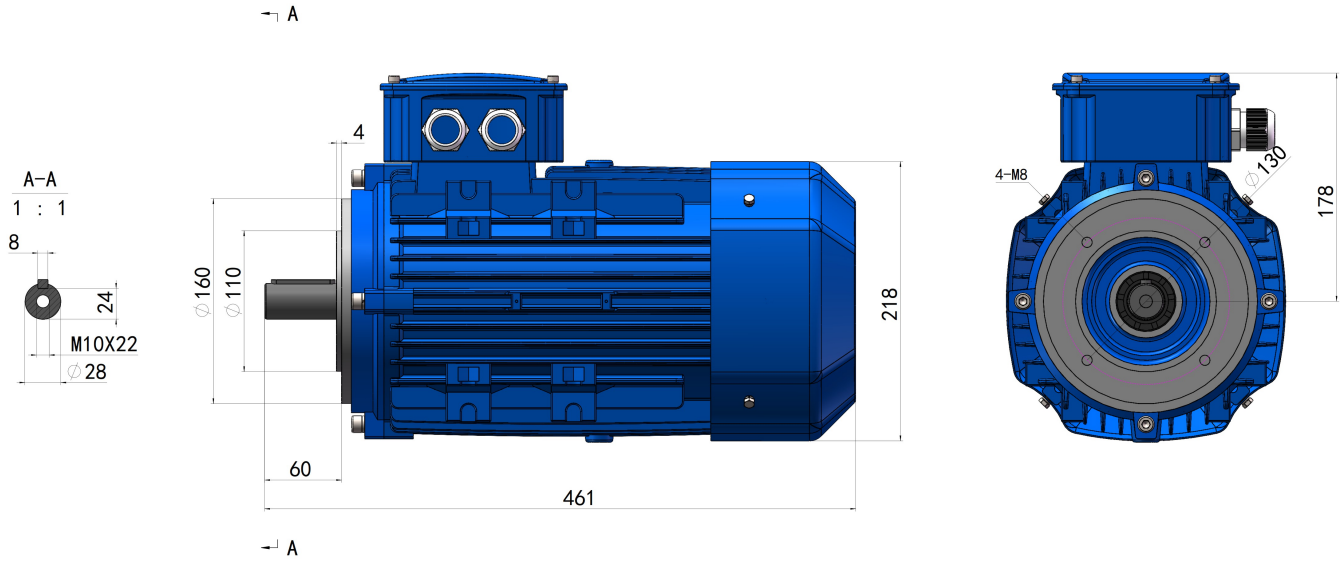

GE3-112M-B14

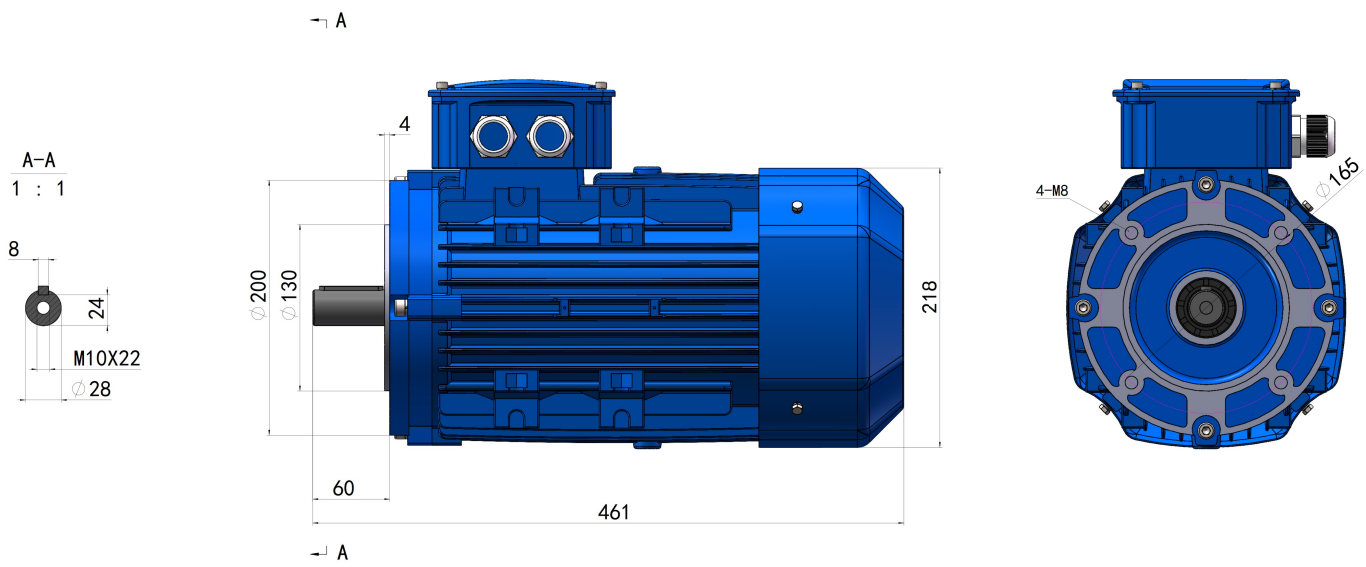

GE3-112M-B14B